MALE END VIEW	FEMALE END VIEW	WIRING DIAGRAM
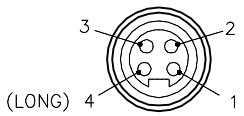	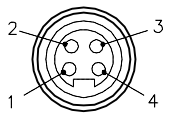	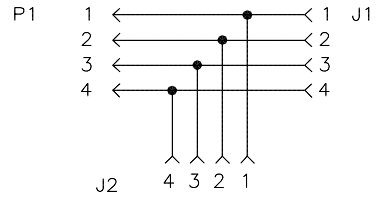

SPECIFICATIONS	
CONTACT CARRIER MATERIAL/COLOR	TPU/YELLOW
MOLDED HEAD MATERIAL/COLOR	TPU/YELLOW
CONTACT MATERIAL/PLATING	BRASS/GOLD
COUPLING NUT MATERIAL/PLATING	BRASS/NICKEL
RATED CURRENT [A]	9.0 A
RATED VOLTAGE [V]	250 V
TEMPERATURE RATING	−40°C TO +80°C (−40°F TO +176°F)
PROTECTION CLASS	MEETS NEMA 1,3,4,6P AND IEC IP67

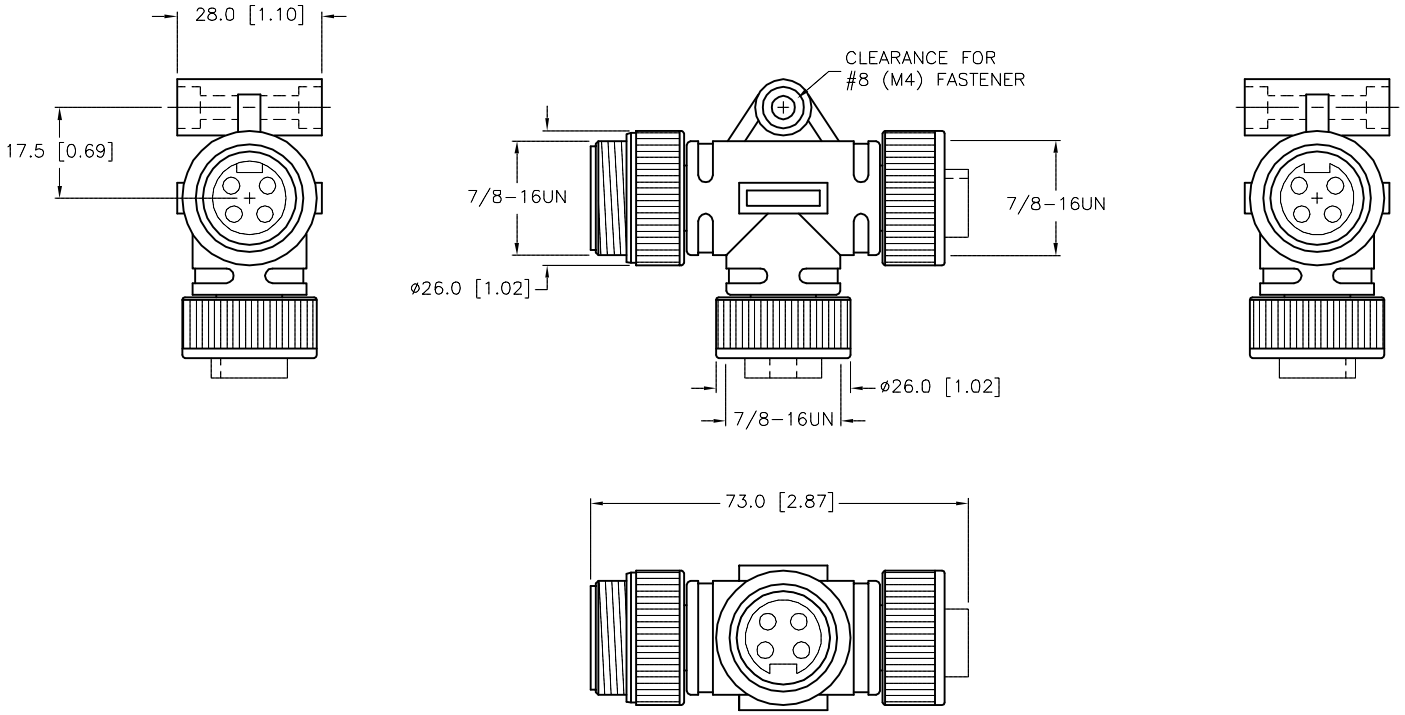

SOURCE DRAWING - FOR REFERENCE ONLY

RELATED DOCUMENTS	3RD ANGLE PROJECTION	THIS DRAWING IS CONFIDENTIAL AND THE PROPERTY OF TURCK INC. USE OF THIS DOCUMENT WITHOUT WRITTEN PERMISSION IS PROHIBITED.	TURCK	3000 CAMPUS DRIVE MINNEAPOLIS, MN 55441 1−800−544−7769 (763) 553−7300 (763) 553−0708 fax www.turck.us
1. 2. 3. 4.				
MATERIAL: SEE SPECIFICATIONS	ALL DIMENSIONS DISPLAYED ON THIS DRAWING ARE FOR REFERENCE ONLY	DRFT: RDS	DATE: 06/28/11	DESCRIPTION: RSM−2RKM 46
		APVD:	SCALE: 1=1.5	
FINISH: SEE SPECIFICATIONS	CONTACT TURCK FOR MORE INFORMATION	UNIT OF MEASUREMENT: **MILLIMETER [INCH]**		IDENTIFICATION NO.: U2−19033 — REV: A
		DO NOT SCALE THIS DRAWING		FILE: U2−19033 — SHEET 1 OF 1

REV	DESCRIPTION	BY	DATE	ECO NO.
A	DRAWING RELEASE	RDS	07/05/11	